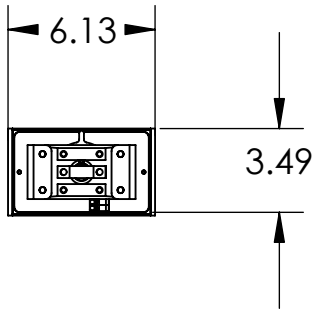

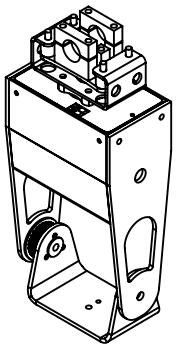

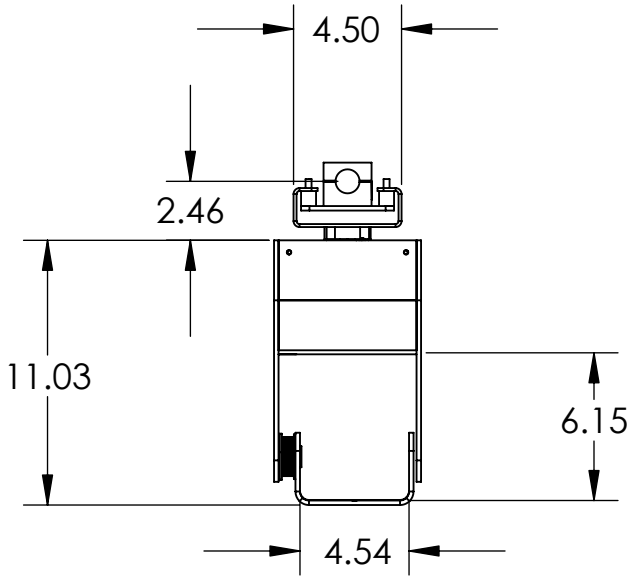

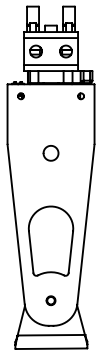

Notes:

UNLESS OTHERWISE SPECIFIED:
DIMENSIONS ARE IN INCHES
TOLERANCES:
FRACTIONAL ±1/8"
ANGULAR: MACH ± .5° BEND ±1°
TWO PLACE DECIMAL ±.030
THREE PLACE DECIMAL ±.005

MATERIAL

FINISH

DO NOT SCALE DRAWING

FREE BIRD INNOVATIONS, INC.

TITLE:

Part #

Qty Req'd

SCALE: 1:8

WEIGHT: 9lbs

REV:

5 4 3 2 1